state of Callfornla

MEMORANDUM

To : Jack Parnell, Director
Department of Food and Agriculture

Date December 30, 1988

Subject : ARB Monitorlng of DEF

From James D. Boyd
Executive Officer
Air Resources Board

In response to your request of November 4, 1986, the ARB has conducted air monitoring for pesticidal uses of S,S,S-Tributylphosphorotrithioate (DEF). This request was made by the Department of Food and Agriculture (DFA) pursuant to Division 7, Chapter 3, Article 1.5, Section 14021. The monitoring results and additional background Information are included in the attachments to this memorandum.

The DEF monitoring was conducted In Fresno County. A summary table of the monitoring results Is presented In Attachment 1. Several actions were taken to select possible sampling sites. These actions included numerous meetings with DFA staff, meetings with representatives of the Agricultural Commlssioner's Office of Fresno County, and surveys of possible monitorlng locations. A chronology of these events has been Included as Attachment II.

Four locations in Fresno County were selected as sampling sites. Background sites were selected at Bakersfield and Fresno. Sampling was conducted four days each week from August 31 to November 4, 1987. Sampllng was conducted to coincide with DEF applications to cotton fields as a defoliant prior to harvest. The complete results of the monltorlng and analysls are included In Attachments III and IV.

If you have questions regarding thls submittal, please contact me at 5-4383 or have your staff contact Robert Barham, Chief, Toxic Air Contaminant Identlflcation Branch, at 2-7072.

cc: Dr. Michael Lipsett, DHS
George Bleth, Fresno Co. APCD
Citron Toy, Kern Co. APCD
Cosmo C. insalaco, Fresno Co. Agricultural Commissloner
Robert Barham

Attachments

Attachments to the Transmittal Memorandum on
DEF Monitoring Data

December 1988

Attachment I:	Summary Table
Attachment II:	Chronology of Events
Attachment III:	UCD Report on Ambient Concentrations of DEF
Attachment IV:	Analysis Method

Attachment 1

Summary Table

Summary Table

Summary of Air Concentrations of DEF in Parts Per Trillion

(24-hour samples collected during September - November 1987)

	Maximum Positive[a]	Second Highest Positive[a]	Average All Samples above MDL	Total # of Samples analyzed	# Above MDL[b]
Tranquility	16	16	5.8	68	62
San Joaquin	15	14	3.9	56	51
West Side Field Station	26	23	8.7	64	64
Huron	9	7	2.1	66	65
Fresno	0.4	0.3	0.3	40	8
Bakersfield	0.9	0.3	0.6	32	4

[a]Average of two replicates

[b]MDL = Minimum detection limit (0.09 ppt) based on 100 ng detection limit per sample and an average total air volume of 88.3 m^3

Attachment II

Chronology of Events

DEF Monitoring
Chronology of Major Events

November 4, 1986	DFA requests ARB to monitor DEF.
July 15, 1987	ARB staff meets with representatives of Fresno County Agricultural Commissioner's Office regardlng DEF use and sampling locations.
August 3, 1987	UCD submits work plan for DEF sampling.
August 3, 1987	ARB submits work plan for DEF analysis.
August 31 - November 4, 1987	Sampling is conducted at Fresno County sites.
March 1988	UCD submits draft report to ARB.
November 1988	UCD submits final report to ARB.

Attachment III

UCD Report on Ambient Concentrations of DEF

Final Report to the Air Resources Board

Pilot Analysis of DEF in Air

Contract # **A5-169-43**

Date: November 29, 1988

James N. Seiber

M. M. McChesney

J. E. Woodrow

T. S. Shibamoto

Department of Environmental Toxicology
University of California, Davis

Table of Contents

Table of Contents ii

List of Tables iii

List of Figures iv

Summary 1

Introduction 4

Experimental 5
- Site Selection and Sampling 5
  - Sites 5
  - Sampling 6
- Laboratory Analysis 9

Results 11
- Field Samples 11
- Sampling Precision 26

Literature Cited 28

Acknowledgments 29

List of Tables

Table 1. Summary of Air Concentrations of DEF in Parts Per Trillion 3

Table 2. Trapping Efficiency of DEF in 24 Hour Air Spikes 8

Table 3. List of Equipment for Field Work 10

Table 4. Number of 24-hour Sampling Periods for DEF 12

Table 5. DEF Ambient Site Results 13

Table 6. Replicate DEF Concentrations at Ambient Sites (ppt) 22

Table 7. Replicate DEF Concentration at Ambient Sites (ng/m^3) 23

Table 8. Average DEF Concentration at Ambient Sites (ppt) 24

Table 9. Average DEF Concentration at Ambient Sites (ng/m^3) 25

Table 10. Precision for Ambient Site Samples (percent) for Replicated Sampling . 27

List of Figures

Figure 1. Map of Sampling Locations in Fresno County 2

Figure 2. Air Sampling Unit 7

Summary

Air sampling for DEF (S,S,S - tributylphosphorotrithioate) was conducted during September, October and the first week of November, 1987, at four ambient locations in Fresno County (Figure 1). Two urban sites were established in the cities of Fresno and Bakersfield.

The samples were collected in XAD-4 samplers and analyzed by a gas chromatographic method. Table 1 has the summary of results: The highest concentrations of DEF (26 parts per trillion or 340 ng/m³) were found at the West Side Field Station. The average of all positive samples at this site was 8.7 ppt (110 ng/m³).

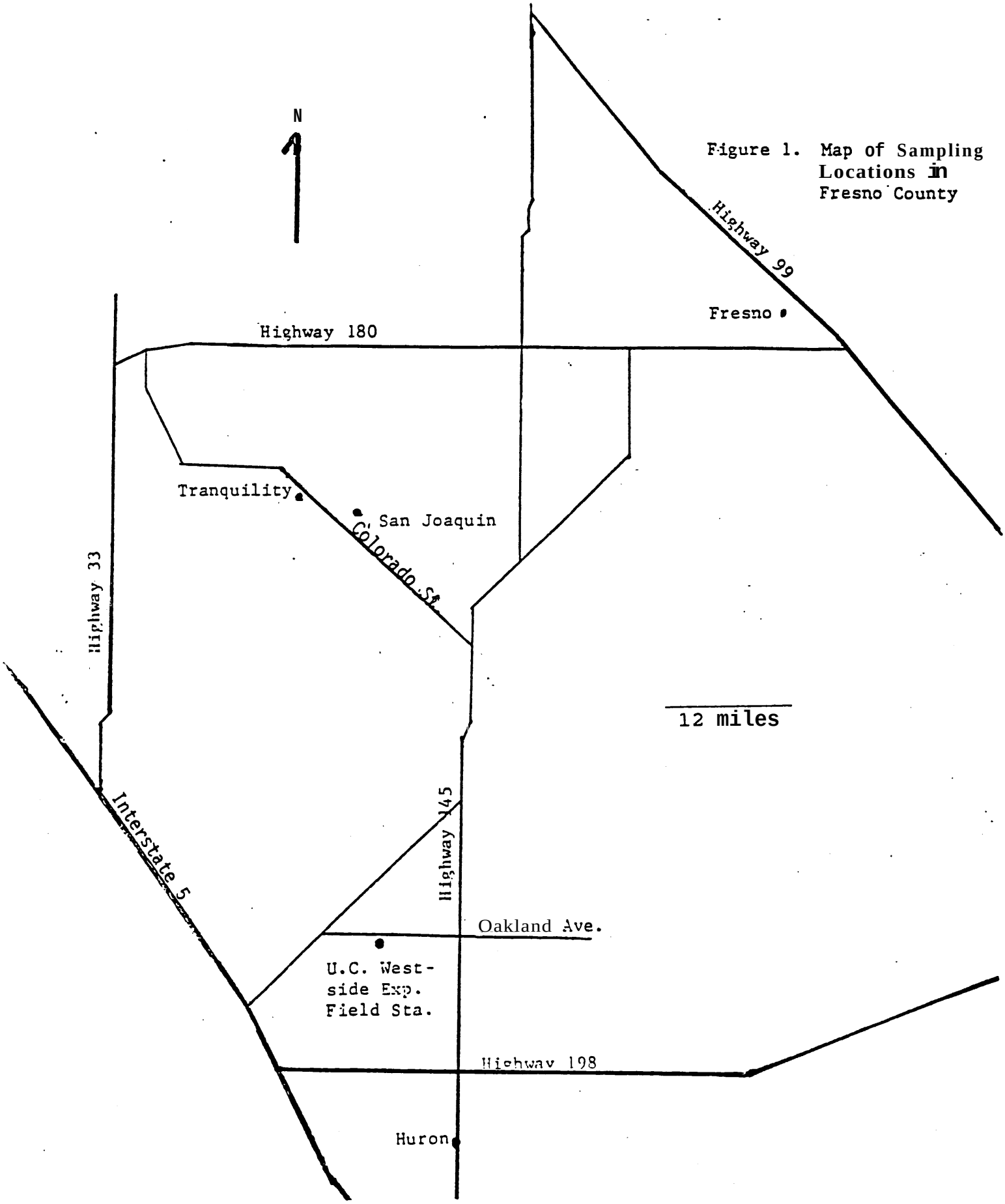

Figure 1. Map of Sampling Locations in Fresno County

Table 1. Summary of Air Concentrations of DEF in Parts Per Trillion

	Maximum Positive[a]	Second Highest Positive[a]	Average All Samples above MDL	Total # of Samples analyzed	# Above MDL[b]
Tranquility	16	16	5.8	68	62
San Joaquin	15	14	3.9	56	51
West Side Field Station	26	23	8.7	64	64
Huron	9	7	2.1	66	65
Fresno	0.4	0.3	0.3	40	8
Bakersfield	0.9	0.3	0.6	32	4

[a]Average of two replicates

[b]MDL = Minimum detection limit (0.09 ppt) based on 100 ng detection limit per sample and an average total air volume of 88.3 m^3

Introduction

DEF is extensively used as a cotton defoliant (558,044 lbs for 1986 in California [1]). Its mobility in the environment has been well documented by prior studies ([2] - [5])

In this study, high volume ambient air samples were collected in Fresno County for DEF analysis at four primary sites plus two urban background sites. Ambient air samples were taken over a 10 week period from August 31 to November 4, 1987, which corresponds to the period of heaviest use of this defoliant in Fresno County.

Experimental

Site Selection and Sampling

Sites

Four sites were selected in Fresno County, at the following locations: Tranquility Fire Department, Tranquility; San Joaquin School, San Joaquin; West Side Field Station, Five Points; Huron Day Care Center, Huron. Two urban background sites were selected: The Air Resources Board monitoring site, Fresno and the Air Resources Board monitoring site in Bakersfield. All primary samplers, with the exception of that at the Huron site, were located 2 meters above the ground. The Huron site was on top of the roof which was approximately 5 meters above the ground. Each site met the ARB siting criteria.

The Tranquility site gave the potential "worst case situation" because that it was surrounded by cotton fields on three sides and was less than 10 meters from the edge of the field to the sampler. Both the San Joaquin and the West Side Field Station sites were within 25 meters of cotton fields, while the Huron site was located approximately one fourth of a mile from the fields. Information was not collected on the distance from these monitoring sites to applications of DEF on cotton fields.

No application site was monitored in this study for logistic reasons. However, several investigators (including our group) have published data on DEF residues in the air near application sites which can be sources of air borne residue concentrations for risk assessment ([2] - [4]).

Sampling

DEF samplers consisted of a 4 cm x 12 cm Teflon cup connected to latex tubing, as shown in Figure 2. The samplers were connected to high volume air sampling pumps via 3/8 inch Tygon tubing. Each sampling tube was rinsed with acetone, charged with 30 ml of XAD - 4 resin, and the pump was turned on. Air flows were measured with a calibrated flow meter by attaching the meter to the top (open) end of each sampler. The starting time for the sampling period was noted in the field log book along with the air flow of the sampler. After sampling was completed and before the pump was turned off, the air flow was measured again and recorded. Measured flows for beginning and ending of the sampling period were averaged for the 24 hour period. The resin was transferred to bottles with Teflon lined lids, labeled and placed on dry ice until transported to U.C. Davis, where they were kept at -20°C. Samples were kept on dry ice while being delivered to the ARB for analysis.

Three replicates were collected at the West Side Field Station site; two replicate samples were taken at the other sites. Replicate samples were taken two meters apart and two meters above the ground. One sampler was marked "A" and designated as the primary sample (as per ARB protocol) while the "B" sampler was the replicate. Trapping studies, completed prior to any field sampling, indicated that the maximum sampling period without breakthrough was 24 hrs with a flow rate of 65 liters per minute (LPM).

A trapping efficiency study was completed by UCD personnel prior to field sampling. Glass tube inlets to air sampling cups, that contained 30 ml of XAD - 4 resin, were spiked with 10 μg of DEF. Samplers ran for 24 hours with a total air volume of

FIGURE 2. Air Sampling Mast Schematic

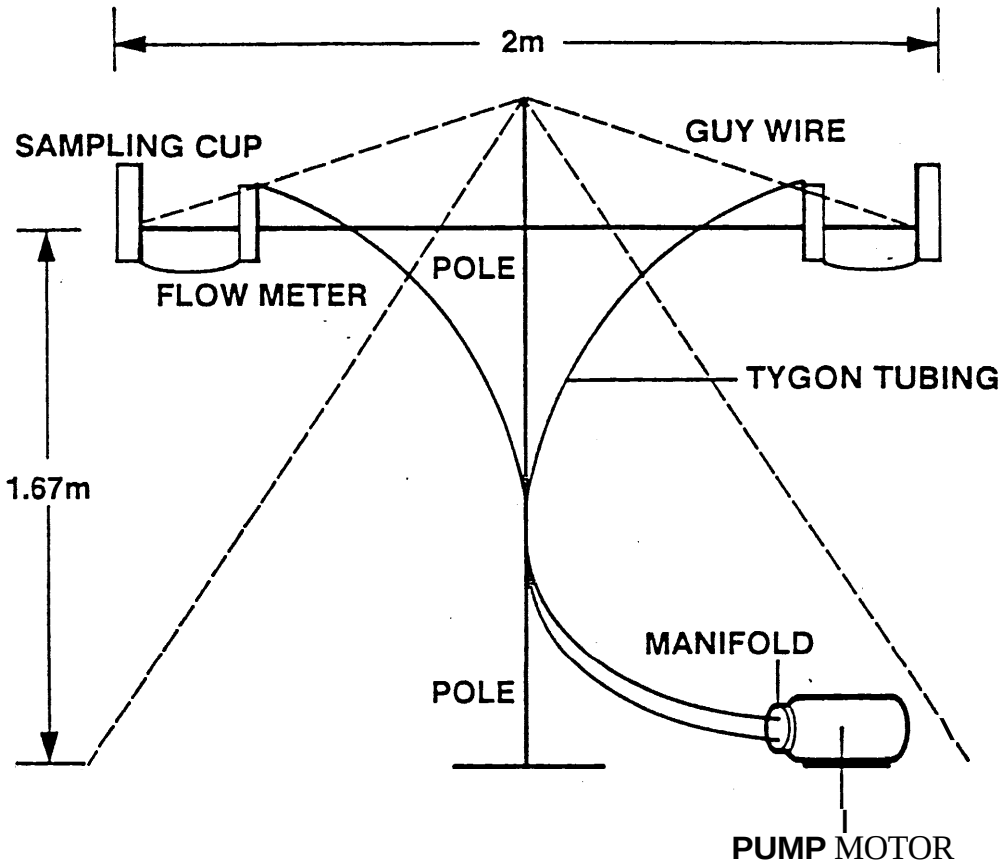

SAMPLER UNIT

76 m^3. Two experiments of three replicates each were run. The glass tube was rinsed with ethyl acetate and analyzed along with the glass wool and resin for DEF.

Samples spiked during the trapping efficiency study were analyzed by UCD. Resin samples were extracted three times with 45 ml of ethyl acetate. The solvent was concentrated using rotary and nitrogen evaporators. Samples were analyzed by gas chromatography using a Varian 2100 with an alkali flame ionization detector and 6 ft. x 1/8 inch packed column. The column packing consisted of 1.5 % SP 2250 and 1.95 % SP 2401 liquid phase on 100/120 mesh Seplecoport. Flow rates for the hydrogen, air and nitrogen carrier gases were 40, 250 and 28 ml/min, respectively. Temperatures for the injector, detector and column were 230, 230 and 200 °C, respectively.

The averages with the standard deviations, in micrograms, and the trapping efficiency are given in Table 2. Backup resin was also run during experiment 2 to check for breakthrough. DEF was detected in only one of the three replicate backup traps (0.11 μg).

Table 2. Trapping Efficiency of DEF in 24 Hour Air Spikes

Experiment	Spike Level (μg)	Found			Per Cent Trapped
		Glass Tube	Glass Wool	Resin	
1	10	1.10 ± 0.805	0.060 ± 0.011	5.47 ± 0.874	62 %
2	10	0.644 t0.417	0.042 ± 0.016	5.74 ± 0.653	62 %

A listing of sources of equipment and supplies used for field sampling is in Table 3. Flow rates at the ambient sites ranged from a minimum of 26 to a maximum of 84 with an average of 65 LPM. Total air volumes for sampling periods ranged from a minimum of 33 to a maximum of 129 cubic meters with an average of 88 cubic meters. These are the flow ranges for different air samplers; for individual samplers, the air flows remained relatively constant during a 24-hr sampling period and were accurately measured for eventual calculation of air concentrations.

Samples were coded using the month and day. A letter followed which represented the site: B, Bakersfield; H, Huron; F, Fresno; S, San Joaquin; T, Tranquility; W, West Side Field Station. The next letter indicated whether the sample was primary (A), replicate (B) or, at the West Side Field Station, a second replicate (C).

Laboratory Analysis

All samples were analyzed by ARB. The analytical procedure for DEF is contained in Attachment IV of the final report by ARB to the Department of Food and Agriculture.

Table 3. List of Equipment for Field Work

1. Met One Anemometer, Campbell Scientific, Logan, UT.
2. Met One Wind Vane, Campbell Scientific, Logan, UT.
3. Microdatalogger, Model CR-21X, Campbell Scientific, Logan, UT
4. Temperature probe, Model 107, Campbell Scientific, Logan, UT
5. High volume air samplers, Model U-1/AT, BGI, Inc., Waltham, MA
6. High volume air sampler, Bendix Co., Baltimore, MD
7. Resi-Grade Methanol, Acetone, Ethyl Acetate, Methylene Chloride, Baker Chemical co.
8. Flow meter, Model F-1500, Gilmont Instruments, Inc., Great Neck, NY
9. XAD-4 resin, Rohm and Haas, Philadelphia, PA.

Results

Field Samples

Table 4 summarizes the field samples collected, which totalled 164. Table 5 contains the ambient site results. Tables 6 and 7 contain the comparison of replicates for ambient site samples in ppt and ng/m³, respectively. Table 8 has the average concentration in ppt while the average concentration in ng/m³ is in Table 9. Because of the variations in flow rates, the minimum detectable limit (MDL) vaned from a minimum of 0.78 ng/m³ (0.060 ppt) to a maximum of 3.0 ng/m³ (0.24 ppt) with an average of 1.1 ng/m³ (0.09 ppt). The highest concentrations of DEF were recorded at the West Side Field Station site (26 ppt).

There was minimal detection of DEF at the urban sites. Bakersfield had only two days where the DEF concentration was above the MDL while Fresno had four days. The Bakersfield site sampling schedule was only done for two days/week while the Fresno site conformed more with the primary sites sampling schedule (i.e. 4 days/week).

Sampling became difficult during the first week of November due to rain and changing weather conditions. Thus, most of the scheduled sampling periods were not completed in November.

It should be noted that this method does not discriminate between DEF and merphos (S,S,S - tributyltrithiophosphite). Merphos will oxidize rapidly in air and on XAD-4 resin to form DEF. However, much more DEF is used on central valley cotton than merphos.

Table 4. Number of 24-hour Sampling Periods for DEF

Date	Bakersfield	Fresno	Huron	Five Points	San Joaquin	Tranquility
8/31/87			X	X	X	X
9/1/87			X	X	X	X
9/2/87		X	X	X		X
9/3/87		X	X	X	X	X
9/8/87	X	X	X	X	X	X
9/9/87	X	X	X	X	X	X
9/10/87		X	X	X	X	X
9/14/87	X	X	X	X	X	X
9/15/87		X	X	X	X	X
9/16/87	X	X	X	X	X	X
9/17/87			X	X	X	X
9/21/87	X	X	X	X	X	X
9/22/87		X	X	X		X
9/23/87	X		X	X	X	X
9/24/87			X	X	X	X
9/28/87	X	X	X		X	X
9/29/87	X		X	X		X
9/30/87			X	X	X	X
10/1/87		X	X	X		X
10/5/87	X		X	X	X	X
10/6/87			X	X		X
10/7/87	X	X	X	X	X	X
10/8/87		X	X	X	X	
10/12/87			X	X	X	X
10/13/87	X	X	X	X	X	X
10/14/87	X	X	X	X	X	X
10/15/87		X	X	X	X	X
10/19/87	X	X	X	X	X	X
10/20/87	X	X	X	X	X	X
10/21/87		X	X		X	X
10/26/87	X		X	X	X	X
10/27/87	X		X	X	X	X
11/2/87			X		X	X
11/3/87			X	X		X
11/4/87				X		X
TOTAL	16	20	34	32	28	34

Table 5. DEF Ambient Site Results

Sample ID	Date	Time On	Period (hrs)	Air Flow (lpm)	Total Air (m^3)	DEF (μg)	DEF Conc. (ng/m^3)	DEF Conc. ppt
831TA	8/31/87	850	23.3	78.0	109	---	B	B
831TB	8/31/87	850	23.3	68.1	95.4	0.8	8.4	0.65
831SA	8/31/87	955	22.9	64.9	89.2	2.0	22.4	1.75
831SB	8/31/87	955	22.9	58.2	80.0	1.4	17.5	1.36
831WA	8/31/87	1252	21.0	76.7	96.9	2.0	20.6	1.61
831WB	8/31/87	1252	21.0	75.8	95.8	2.0	20.9	1.63
831WC	8/31/87	1252	21.0	76.1	96.1	2.0	20.8	1.62
831HA	8/31/87	1434	19.8	76.7	91.4	1.2	13.1	1.02
831HB	8/31/87	1435	19.8	74.3	88.5	1.3	14.7	1.14
91TA	9/1/87	828	23.5	71.1	101	0.7	7.0	0.54
91TB	9/1/87	828	23.5	67.4	95.3	0.8	8.4	0.65
91SA	9/1/87	905	23.7	61.2	87.3	1.4	16.0	1.25
91SB	9/1/87	905	23.7	59.3	84.5	1.4	16.6	1.29
91WA	9/1/87	1002	23.7	78.0	111	1.2	10.8	0.84
91WB	9/1/87	1002	23.7	77.1	110	1.4	12.7	0.99
91WC	9/1/87	1002	23.7	77.1	110	1.6	14.5	1.13
91HA	9/1/87	1031	23.7	78.6	112	2.0	17.8	1.39
91HB	9/1/87	1031	23.7	75.2	107	1.8	16.8	1.31
92TA	9/2/87	837	23.3	55.2	77.1	1.0	13.0	1.01
92TB	9/2/87	837	23.3	51.3	71.7	0.8	11.1	0.87
92SA	9/2/87	837	23.3	--	--	--	A	A
92SB	9/2/87	837	23.3	--	--	--	A	A
92WA	9/2/87	956	23.1	77.8	108	1.0	9.3	0.72
92WB	9/2/87	956	23.1	76.3	105	1.1	10.4	0.81
92WC	9/2/87	956	23.1	76.7	106	1.2	11.3	0.88
92HA	9/2/87	1023	23.1	75.4	104	0.8	7.6	0.59
92HB	9/2/87	1023	23.1	72.8	101	1.0	9.9	0.77
92FA	9/2/87	1236	27.3	75.2	123	<0.1	<MDL	<MDL
92FB	9/2/87	1236	27.3	75.4	123	<0.1	<MDL	<MDL
93TA	9/3/87	809	27.1	61.0	99.3	0.5	5.04	0.39
93TB	9/3/87	809	27.1	57.1	93.0	0.4	4.30	0.34
93SA	9/3/87	828	27.1	48.3	78.7	0.6	7.6	0.59
93SB	9/3/87	828	27.1	43.6	71.0	0.4	5.6	0.44
93WA	9/3/87	913	27.3	75.4	123	0.4	3.2	0.25
93WB	9/3/87	913	27.3	75.4	123	0.3	2.4	0.19
93wc	9/3/87	913	27.3	74.8	122	0.3	2.4	0.19
93HA	9/3/87	938	27.4	77.1	127	0.6	4.7	0.37
93HB	9/3/87	938	27.4	73.7	121	0.6	4.9	0.38
93FA	9/3/87	1606	18.5	74.5	83.1	<0.1	<MDL	<MDL
93FB	9/3/87	1606	18.5	74.5	83.1	<0.1	<MDL	<MDL
98TA	9/8/87	1101	21.7	62.5	81.6	0.3	3.7	0.29
98TB	9/8/87	1101	21.7	56.9	74.3	0.2	2.7	0.21
98SA	9/8/87	1125	21.8	45.5	59.6	0.9	15.1	1.18
98SB	9/8/87	1125	21.8	42.7	55.9	1.0	17.9	1.39
98WA	9/8/87	1225	21.8	78.2	102	2.2	21.6	1.68
98WB	9/8/87	1225	21.8	78.6	103	2.4	23.2	1.81
98WC	9/8/87	1225	21.8	78.0	102	1.0	9.8	0.76

Table 5 (continued)

Sample ID	Date	Time On	Period (hrs)	Air Flow (lpm)	Total Air (m^3)	DEF (μg)	DEF Conc. (ng/m^3)	DEF Conc. ppt
98HA	9/8/87	1245	22.2	65.1	87.0	0.1	1.1	0.09
98HB	9/8/87	1245	22.2	60.1	80.4	0.1	1.2	0.10
98FA	9/8/87	1413	22.4	75.4	101	<0.1	<MDL	<MDL
98FB	9/8/87	1413	22.4	76.1	102	<0.1	<MDL	<MDL
98BA	9/8/87	0000	24	51.3	73.8	<0.1	<ML	<MDL
98BB	9/8/87	0000	24	46.1	66.4	<0.1	<MDL	<MDL
99TA	9/9/87	859	23.1	62.1	86.2	<0.1	<MDL	<MDL
99TB	9/9/87	859	23.1	57.8	80.2	<0.1	<MDL	<MDL
99SA	9/9/87	925	23.2	44.6	62.2	0.1	1.6	0.13
99SB	9/9/87	925	23.2	42.5	59.2	0.1	1.7	0.13
99WA	9/9/87	1029	23.0	81.0	112	0.2	1.8	0.14
99WB	9/9/87	1029	23.0	81.9	113	0.2	1.8	0.14
99WC	9/9/87	1029	23.0	80.1	111	0.2	1.8	0.14
99HA	9/9/87	1108	23.7	65.1	92.9	1.2	12.9	1.01
99HB	9/9/87	1108	23.7	60.3	86.1	1.0	11.6	0.90
99FA	9/9/87	1258	27.5	76.9	127	<0.1	<MDL	<MDL
99FB	9/9/87	1258	27.5	75.8	125	<0.1	<MDL	<MDL
99BA	9/9/87	0000	24	50.4	72.6	<0.1	<MDL	<MDL
99BB	9/9/87	0000	24	47.8	68.9	<0.1	<MDL	<MDL
910TA	9/10/87	820	26.4	61.0	96.8	<0.1	<MDL	<MDL
910TB	9/10/87	820	26.4	58.0	92.0	<0.1	<MDL	<MDL
910SA	9/10/87	855	26.2	39.3	61.7	<0.1	<MDL	<MDL
910SB	9/10/87	855	26.2	38.0	59.7	<0.1	<MDL	<MDL
910WA	9/10/87	946	26.1	81.0	127	14	110	8.59
910WB	9/10/87	946	26.1	81.4	127	15	117	9.15
910WC	9/10/87	946	26.1	79.9	125	22	175	13.68
910HA	9/10/87	1100	25.4	66.4	101	1.0	9.9	0.77
910HB	9/10/87	1100	25.4	61.6	94.1	0.7	7.4	0.58
910FA	9/10/87	1638	16.1	76.3	73.9	<0.1	<MDL	<MDL
910FB	9/10/87	1638	16.1	76.7	74.3	<0.1	<MDL	<MDL
914TA	9/14/87	I232	20.9	63.4	79.8	0.3	3.8	0.29
914TB	9/14/87	1232	20.9	57.8	72.7	0.5	6.9	0.54
914SA	9/14/87	1318	20.6	36.7	45.5	0.2	4.4	0.34
914SB	9/14/87	1318	20.6	35.8	44.5	0.2	4.5	0.35
914WA	9/14/87	1400	21.0	82.9	104	26	248	19.3
914WB	9/14/87	1400	21.0	81.4	102	21	204	15.9
914WC	9/14/87	1400	21.0	81.9	103	21	203	15.8
914HA	9/14/87	1422	20.9	64.6	81.3	5.0	61.4	4.79
914HB	9/14/87	1422	20.9	60.6	76.2	4.7	61.6	4.80
914FA	9/14/87	1616	21.1	76.3	96.7	<0.1	<MDL	<MDL
914FB	9/14/87	1616	21.1	76.3	96.7	<0.1	<MDL	<MDL
914BA	9/14/87	0000	24	52.1	75.1	<0.1	<MDL	<MDL
914BB	9/14/87	0000	24	47.0	67.6	<0.1	<MDL	<MDL
915TA	9/15/87	940	23.7	63.4	90.3	0.9	10.0	0.78
915TB	9/15/87	940	23.7	57.3	81.7	0.8	9.8	0.76
915SA	9/15/87	1008	23.8	33.7	48.2	0.7	14.5	1.13
915SB	9/15/87	1008	23.8	31.5	45.1	0.6	13.3	1.04

Table 5 (continued)

Sample ID	Date	Time On	Period (hrs)	Air Flow (lpm)	Total Air (m^3)	DEF (μg)	DEF Conc. (ng/m^3)	DEF Conc. ppt
915WA	9/15/87	1112	23.7	83.2	118	7.6	64.2	5.00
915WB	9/15/87	1112	23.7	82.1	116	8.0	68.5	5.34
915WC	9/15/87	1112	23.7	81.9	116	9.2	79.0	6.15
915HA	9/15/87	1145	24.5	64.4	94.9	5.0	52.7	4.10
915HB	9/15/87	1145	24.5	59.9	88.2	5.0	56.6	4.41
915FA	9/15/87	1331	24.4	75.0	110	<0.1	<MDL	<MDL
915FB	9/15/87	1331	24.4	76.1	111	<0.1	<MDL	<MDL
916TA	9/16/87	939	23.6	63.8	90.3	0.9	10.0	0.78
916TB	9/16/87	939	23.6	57.5	81.5	0.8	9.8	0.76
916SA	9/16/87	1008	23.6	29.8	42.3	1.0	23.6	1.34
916SB	9/16/87	1008	23.6	27.6	39.2	0.8	20.4	1.59
916WA	9/16/87	1102	23.5	81.9	115	2.7	23.3	1.81
916WB	9/16/87	1102	23.5	81.4	115	2.6	22.6	1.76
916WC	9/16/87	1102	23.5	80.6	114	4.0	35.1	2.73
916HA	9/16/87	1223	22.9	63.8	87.7	1.2	13.7	1.07
916HB	9/16/87	1223	22.9	60.1	82.7	1.4	16.9	1.32
916FA	9/16/87	1404	27.1	75.4	122	<0.1	<MDL	<MDL
916FB	9/16/87	1404	27.1	75.0	121	<0.1	<MDL	<MDL
916BA	9/16/87	0000	24	36.6	52.7	<0.1	<MDL	<MDL
916BB	9/16/87	0000	24	36.6	52.7	<0.I	<MDL	<MDL
917TA	9/17/87	930	23.5	62.1	87.6	1.2	13.7	1.07
917TB	9/17/87	930	23.5	56.5	79.7	0.8	10.0	0.78
917SA	9/17/87	954	23.4	27.4	38.6	0.8	20.7	1.61
917SB	9/17/87	954	23.4	25.5	35.9	0.6	16.7	1.30
917WA	9/17/87	1046	23.5	83.6	118	2.0	16.9	1.32
917WB	9/17/87	1046	23.5	83.6	118	2.2	18.6	1.45
917WC	9/17/87	1046	23.5	82.9	117	1.8	15.3	1.20
917HA	9/17/87	1125	23.4	65.1	91.6	1.3	14.2	1.11
917HB	9/17/87	1125	23.4	61.9	87.0	1.3	14.9	1.16
921TA	9/21/87	1323	20.4	41.4	50.7	3.1	61.1	4.76
921TB	9/21/87	1323	20.4	49.6	60.7	5.5	90.5	7.05
921SA	9/21/87	1348	20.4	41.8	51.4	<0.1	<MDL	<MDL
921SB	9/21/87	1348	20.4	41.0	50.3	1.4	27.8	2.16
921WA	9/21/87	1507	20.0	69.8	84.0	9.0	107	8.34
921WB	9/21/87	1507	20.0	50.0	60.2	8.4	139	10.9
921WC	9/21/87	1507	20.0	83.2	100	11	110	8.56
921HA	9/21/87	1544	20.1	54.8	66.2	0.2	3.0	0.24
921HB	9/21/87	1544	20.1	52.0	62.8	<0.1	<MDL	<MDL
921FA	9/21/87	1738	19.8	69.8	83.2	<0.1	<MDL	<MDL
921FB	9/21/87	1738	19.8	55.2	65.8	<0.1	<MDL	<MDL
921BA	9/21/87	0000	24	34.9	50.3	<0.1	<MDL	<MDL
921BB	9/21/87	0000	24	39.2	56.5	<0.1	<MDL	<MDL
922TA	9/22/87	1000	23.0	42.3	58.6	3.8	64.8	5.05
922TB	9/22/87	1000	23.0	48.3	66.9	5.0	74.7	5.82
922SA	9/22/87	1030	--	--	--	--	A	A
922SB	9/22/87	1030	--	--	--	--	A	A
922WA	9/22/87	1122	23.7	69.2	98.5	11	111	8.69

Table 5 (continued)

Sample ID	Date	Time On	Period (hrs)	Air Flow (lpm)	Total Air (m^3)	DEF (μg)	DEF Conc. (ng/m^3)	DEF Conc. ppt
922WB	9/22/87	1122	23.7	70.5	100	13	129	10.1
922WC	9/22/87	1122	23.7	83.2	118	16	135	10.5
922HA	9/22/87	1203	23.7	53.5	76.3	1.0	13.1	1.02
922HB	9/22/87	1203	23.7	49.8	71.1	1.2	16.9	1.31
922FA	9/22/87	1338	23.8	67.2	96.3	<0.1	<MDL	<MDL
922FB	9/22/87	1338	23.8	55.2	79.0	<0.1	<MDL	<MDL
923TA	9/23/87	917	23.1	43.8	60.7	3.2	52.7	4.10
923TB	9/23/87	917	23.1	44.0	61.0	3.7	60.6	4.72
923SA	9/23/87	1600	16.8	32.4	32.7	2.6	79.3	6.18
923SB	9/23/87	1600	16.8	37.3	37.7	2.6	68.8	5.36
923WA	9/23/87	1130	22.4	69.0	93.0	27	290	22.6
923WB	9/23/87	1130	22.4	62.7	84.6	23	271	21.1
923WC	9/23/87	1130	22.4	84.0	113	27	238	18.5
923HA	9/23/87	1200	22.7	51.3	69.9	3.0	42.9	3.34
923HB	9/23/87	1200	22.7	49.2	67.0	2.8	41.8	3.25
923BA	9/23/87	0000	24	50	72.0	0.1	1.4	0.11
923BB	9/23/87	0000	24	50	72.0	0.4	5.6	0.43
924TA	9/24/87	837	22.6	44.4	60.4	7.3	120	9.40
924TB	9/24/87	837	22.6	49.4	67.2	5.1	75.9	5.91
924SA	9/24/87	900	22.7	42.7	58.2	4.9	84.2	6.56
924SB	9/24/87	900	22.7	41.4	56.4	2.8	49.6	3.86
924WA	9/24/87	1020	22.2	69.2	92.1	33	358	27.8
924WB	9/24/87	1020	22.2	72.0	95.9	36	375	29.2
924WC	9/24/87	1020	22.2	83.6	111	32	287	22.3
924HA	9/24/87	1050	22.2	46.8	62.5	6.4	102	7.97
924HB	9/24/87	1050	22.2	49.6	66.2	7.9	119	9.29
928TA	9/28/87	1327	20.3	61.2	74.6	4.4	59.0	4.59
928TB	9/28/87	1327	20.3	57.8	70.4	3.6	51.1	3.98
928SA	9/28/87	1404	20.1	49.6	59.8	1.6	26.7	2.08
928SB	9/28/87	1404	20.1	45.3	54.6	2.2	40.2	3.13
928WA	9/28/87	1611	18.9	81.9	93.2	--	C	C
928WB	9/28/87	1611	18.9	81.2	92.4	--	C	C
928WC	9/28/87	1611	18.9	83.6	95.1	--	C	C
928HA	9/28/87	1646	19.1	62.5	71.7	2.6	36.2	2.82
928HB	9/28/87	1646	19.1	59.7	68.5	3.4	49.6	3.87
928FA	9/28/87	1723	20.0	71.1	85.6	<0.1	<MDL	<MDL
928FB	9/28/87	1723	20.0	71.5	86.1	<0.1	<MDL	<MDL
928BA	9/28/87	0000	24	47.0	67.6	<0.1	<MDL	<MDL
928BB	9/28/87	0000	24	46.1	66.4	<0.1	<MDL	<MDL
929TA	9/29/87	952	22.3	62.7	83.9	11	131	10.2
929TB	9/29/87	952	22.3	57.5	77.0	12	155	12.1
929SA	9/29/87	1019	22.8	--	--	--	A	A
929SB	9/29/87	1019	22.8	--	--	--	A	A
929WA	9/29/87	1126	22.5	81.4	110	23	208	16.2
929WB	9/29/87	1126	22.5	83.6	113	19	168	13.1
929WC	9/29/87	1126	22.5	83.6	113	26	229	17.8
929HA	9/29/87	1200	22.7	64.2	87.5	2.2	25.1	1.96

Table 5 (continued)

Sample ID	Date	Time On	Period (hrs)	Air Flow (lpm)	Total Air (m^3)	DEF (μg)	DEF Conc. (ng/m^3)	DEF Conc. ppt
929HB	9/29/87	1200	22.7	59.1	80.4	2.4	29.8	2.32
929BA	9/29/87	0000	24	50.0	72.0	0.7	9.7	0.75
929BB	9/27/87	0000	24	50.0	72.0	1.0	14	1.1
930TA	9/30/87	825	26.1	64.2	100	16	158	12.3
930TB	9/30/87	825	26.1	56.5	88.7	14	157	12.2
930SA	9/30/87	907	25.8	48.7	75.7	12	158	12.3
930SB	9/30/87	907	25.8	44.0	68.3	13	190	14.8
930WA	9/30/87	1015	25.7	81.0	125	34	271	21.1
930WB	9/30/87	1015	25.7	82.1	126	30	236	18.4
930WC	9/30/87	1015	25.7	82.7	127	40	312	24.3
930HA	9/30/87	1048	25.9	63.8	99.3	4.1	41.3	3.21
930HB	9/30/87	1048	25.9	58.6	91.3	4.9	53.6	4.18
101FA	10/1/87	816	24.7	75.0	111	0.7	6.3	0.49
101FB	10/1/87	816	24.7	74.8	111	0.5	4.5	0.35
101TA	10/1/87	1045	23.6	62.1	88.0	17	193	15.0
101TB	10/1/87	1045	23.6	57.8	81.9	18	219	17.1
101SA	10/1/87	1107	23.6	48.9	69.5	--	C	C
101SB	10/1/87	1107	23.6	44.9	63.7	--	C	C
101WA	10/1/87	1211	23.3	81.9	114	28	244	19.1
101WB	10/1/87	1211	23.3	82.3	115	36	312	24.4
101WC	10/1/87	1211	23.3	82.5	115	34	294	23.0
101HA	10/1/87	1250	23.1	60.8	84.4	3.9	46.2	3.60
101HB	10/1/87	1250	23.1	60.3	83.8	4.6	54.9	4.28
105TA	10/5/87	1338	20.6	61.4	76.1	12	157	12.3
105TB	10/5/87	1338	20.6	56.9	70.5	13	184	14.4
105SA	10/5/87	1420	21.4	26.8	34.4	8.4	244	19.1
105SB	10/5/87	1420	21.4	44.9	57.7	8.6	149	11.6
105WA	10/5/87	1545	20.9	80.6	101	7.0	69.1	5.38
105WB	10/5/87	1545	20.9	80.6	101	12	118	9.23
105WC	10/5/87	1545	20.9	81.9	102	7.4	71.9	5.60
105HA	10/5/87	1609	21.1	63.4	80.4	0.6	7.5	0.58
105HB	10/5/87	1609	21.1	62.1	78.8	0.5	6.3	0.49
105BA	10/5/87	0000	24	47.8	68.9	<0.1	<MDL	<MDL
105BB	10/5/87	0000	24	50.4	72.6	<0.1	<MDL	<MDL
106TA	10/6/87	1031	23.4	61.2	86.3	10	116	9.0
106TB	10/6/87	1031	23.4	57.5	81.1	11	136	10.6
106SA	10/6/87	1159	22.6	47.0	63.9	--	C	C
106SB	10/6/87	1159	22.6	44.6	60.7	--	C	C
106WA	10/6/87	1252	22.9	81.0	111	16	143	11.2
106WB	10/6/87	1252	22.9	80.6	110	17	153	12.0
106WC	10/6/87	1252	22.9	81.4	111	--	C	C
106HA	10/6/87	1325	22.9	63.4	87.3	3.1	35.5	2.77
106HB	10/6/87	1325	22.9	59.1	81.3	2.2	27.0	2.11
107TA	10/7/87	1012	24.4	61.2	89.6	10	111	8.69
107TB	10/7/87	1012	24.4	55.6	81.4	12	147	11.5
107SA	10/7/87	1043	24.1	48.3	70.0	5.0	71.4	5.56
107SB	10/7/87	1043	24.1	46.1	66.8	5.5	82.2	6.41

Table 5 (continued)

Sample ID	Date	Time On	Period (hrs)	Air Flow (lpm)	Total Air (m^3)	DEF (μg)	DEF Conc. (ng/m^3)	DEF Conc. ppt
107WA	10/7/87	1200	24.3	80.6	117	16	135	10.5
107WB	10/7/87	1200	24.3	81.9	119	14	116	9.10
107WC	10/7/87	1200	24.3	82.3	120	17	141	10
107HA	10/7/87	1230	24.5	65.5	96.3	9.0	93.4	7.28
107HB	10/7/87	1230	24.5	60.8	89.4	8.4	94.0	7.32
107FA	10/7/87	1400	19.1	74.1	85.0	0.4	4.7	0.37
107FB	10/7/87	1400	19.1	73.7	84.5	0.2	2.4	0.18
107BA	10/7/87	0000	24	46.1	66.4	<0.1	<MDL	<MDL
107BB	10/7/87	0000	24	53.0	76.3	<0.1	<MDL	<MDL
108TA	10/8/87	1042	23.9	37.6	53.9	8.2	152	11.9
108TB	10/8/87	1042	23.9	36.7	52.6	8.0	150	11.8
108SA	10/8/87	1057	24.0	48.8	70.3	5.6	79.7	6.22
108SB	10/8/87	1057	24.0	47.1	67.8	4.8	70.8	5.52
108FA	10/8/87	917	24.2	76.3	111	0.4	3.6	0.28
108FB	10/8/87	917	24.2	75.4	109	0.4	3.6	0.28
108WA	10/8/87	1238	23.1	82.5	114	26	226	17.6
108WB	10/8/87	1238	23.1	82.3	114	24	209	16.3
108WC	10/8/87	1238	23.1	83.8	116	23	197	15.3
108HA	10/8/87	1306	23.1	66.2	92.0	3.8	41.3	3.22
108HB	10/8/87	1306	23.1	62.7	87.2	4.3	49.3	3.84
1012TA	10/12/87	1430	21.3	61.6	78.8	16	203	15.8
1012TB	10/12/87	1430	21.3	59.1	75.5	15	198	15.4
1012SA	10/12/87	1450	21.3	48.9	62.7	6.6	105	8.20
1012SB	10/12/87	1450	21.3	46.1	59.1	7.6	128	10.0
1012WA	10/12/87	1530	21.5	81.6	105	31	294	22.9
1012WB	10/12/87	1530	21.5	82.7	106	29	271	21.2
1012wc	10/12/87	1530	21.5	83.2	107	35	326	25.4
1012HA	10/12/87	1600	21.5	65.5	84.6	4.4	52.0	4.05
1012HB	10/12/87	1600	21.5	62.9	81.3	4.0	49.2	3.83
1013TA	10/13/87	1153	24.1	61.2	88.8	12	135	10.5
1013TB	10/13/87	1153	24.1	--	--	--	B	B
1013SA	10/13/87	1218	26.0	48.7	76.0	6.1	80.2	6.25
1013SB	10/13/87	1218	26.0	46.1	72.0	4.7	65.2	5.08
1013WA	10/13/87	1310	23.6	81.4	115	9.1	78.7	6.13
1013WB	10/13/87	1310	23.6	83.2	118	9.5	80.4	6.26
1013WC	10/13/87	1310	23.6	82.9	117	8.8	74.7	5.82
1013HA	10/13/87	1335	23.7	63.4	90.3	6.1	67.5	5.26
1013HB	10/13/87	1335	23.7	60.8	86.6	6.0	69.2	5.39
1013FA	10/13/87	1608	23.9	72.4	103	<0.1	<MDL	<MDL
1013FB	10/13/87	1608	23.9	73.3	105	<0.1	<MDL	<MDL
1013BA	10/13/87	0000	24	47.0	67.6	<0.1	<MDL	<MDL
1013BB	10/13/87	0000	24	50.4	72.6	<0.1	<MDL	<MDL
1014TA	10/14/87	1207	21.6	62.5	81.1	12	147	11.5
1014TB	10/14/87	1207	21.6	57.8	75.0	10	133	10.3
1014SA	10/14/87	1422	19.9	48.7	58.4	4.0	68.4	5.33
1014SB	10/14/87	1422	19.9	45.7	54.8	3.6	65.6	5.11
1014WA	10/14/87	1300	22.1	81.0	107	5.0	46.5	3.62

Table 5 (continued)

Sample ID	Date	Time On	Period (hrs)	Air Flow (lpm)	Total Air (m^3)	DEF (μg)	DEF Conc. (ng/m^3)	DEF Conc. ppt
1014WB	10/14/87	1300	22.1	81.4	108	6.0	55.5	4.32
1014WC	10/14/87	1300	22.1	81.4	108	6.8	62.9	4.90
1014HA	10/14/87	1324	22.3	66.8	89.5	0.6	6.7	0.52
1014HB	10/14/87	1324	22.3	63.4	84.9	0.6	7.1	0.55
1014FA	10/14/87	1615	25.2	74.5	113	<0.1	<MDL	<MDL
1014FB	10/14/87	1615	25.2	74.1	112	<0.1	<MDL	<MDL
1014BA	10/14/87	0000	24	50	72	<0.1	<MDL	<MDL
1014BB	10/14/87	0000	24	50	72	<0.1	<MDL	<MDL
1015TA	10/15/87	950	23.8	63.4	90.7	7.2	79.4	6.18
1015TB	10/15/87	950	23.8	57.8	82.7	6.8	82.2	6.40
1015SA	10/15/87	1029	23.5	49.2	69.3	1.0	14.4	1.12
1015SB	10/15/87	1029	23.5	47.0	66.3	0.9	13.6	1.06
1015WA	10/15/87	1117	23.4	79.7	111	4.2	37.5	2.92
1015WB	10/15/87	1117	23.4	81.9	115	3.2	27.8	2.17
1015WC	10/15/87	1117	23.4	83.6	117	3.2	27.3	2.12
1015HA	10/15/87	1150	23.2	66.4	92.7	0.3	3.2	0.25
1015HB	10/15/87	1150	23.2	62.1	86.7	0.2	2.3	0.18
1015FA	10/15/87	1742	14.7	73.5	64.9	<0.1	<MDL	<MDL
1015FB	10/15/87	1742	14.7	74.5	65.9	<0.1	<MDL	<MDL
1019TA	10/19/87	1532	20.5	63.4	77.9	6.4	82.1	6.39
1019TB	10/19/87	1532	20.5	57.8	71.1	6.4	90.0	7.01
1019SA	10/19/87	1600	20.4	48.3	59.2	5.3	89.4	6.97
1019SB	10/19/87	1600	20.4	46.1	56.6	4.0	70.6	5.50
1019WA	10/19/87	1639	20.5	81.9	100	3.9	38.7	3.01
1019WB	10/19/87	1639	20.5	82.9	102	5.3	51.9	4.04
1019WC	10/19/87	1639	20.5	83.2	102	4.5	43.9	3.42
1019HA	10/19/87	1701	20.7	66.4	82.6	0.7	8.5	0.66
1019HB	10/19/87	1701	20.7	62.1	77.2	0.6	7.8	0.60
1019FA	10/19/87	1827	20.9	76.7	96.3	<0.1	<MDL	<MDL
1019FB	10/19/87	1827	20.9	49.4	62.0	<0.1	<MDL	<MDL
1019BA	10/19/87	0000	24	40.1	57.7	<0.1	<MDL	<MDL
1019BB	10/19/87	0000	24	36.6	52.8	<0.1	<MDL	<MDL
1020TA	10/20/87	1210	23.2	62.5	87.3	5.4	61.8	4.81
1020TB	10/20/87	1210	23.2	57.3	80.1	5.0	62.4	4.86
1020SA	10/20/87	1232	23.3	48.7	68.4	2.4	35.1	2.73
1020SB	10/20/87	1232	23.3	46.6	65.4	2.8	42.8	3.33
1020WA	10/20/87	1321	23.3	81.4	114	9.0	78.7	6.13
1020WB	10/20/87	1321	23.3	82.3	115	8.7	75.3	5.87
1020WC	10/20/87	1321	23.3	83.6	117	8.5	72.4	5.64
1020HA	10/20/87	1350	23.5	65.5	92.6	1.3	14.0	1.09
1020HB	10/20/87	1350	23.5	61.2	86.5	1.8	20.8	1.62
1020FA	10/20/87	1531	25.3	74.1	112	0.3	2.7	0.21
1020FB	10/20/87	1531	25.3	74.1	112	0.2	1.8	0.14
1021TA	10/21/87	1132	24.0	62.1	89.7	4.4	49.0	3.82
1021TB	10/21/87	1132	24.0	57.3	82.9	5.0	60.3	4.70
1021SA	10/21/87	1204	24.0	46.1	66.7	1.0	15.0	1.17
1021SB	10/21/87	1204	24.0	46.1	66.7	0.6	9.0	0.70

Table 5 (continued)

Sample ID	Date	Time On	Period (hrs)	Air Flow (lpm)	Total Air (m^3)	DEF (μg)	DEF Conc. (ng/m^3)	DEF Conc. ppt
1021WA	10/21/87	1252	--	--	--	--	A	A
1021WB	10/21/87	1252	--	--	--	--	A	A
1021WC	10/21/87	1252	--	--	--	--	A	A
1021HA	10/21/87	1328	24.4	68.1	99.9	0.2	2.0	0.16
1021HB	10/21/87	1328	24.4	62.5	91.7	0.2	2.2	0.17
1021FA	10/21/87	1701	16.8	75.0	75.8	<0.1	<MDL	<MDL
1021FB	10/21/87	1701	16.8	74.5	75.4	<0.1	<MDL	<MDL
1021BA	10/21/87	0000	24	40.1	57.7	<0.1	<MDL	<MDL
1021BB	10/21/87	0000	24	36.6	52.8	<0.1	<MDL	<MDL
1026TA	10/26/87	1523	19.1	64.2	73.9	0.3	4.1	0.32
1026TB	10/26/87	1523	19.1	62.5	71.9	0.2	2.8	0.22
1026SA	10/26/87	1542	19.4	49.6	57.8	<0.1	<MDL	<MDL
1026SB	10/26/87	1542	19.4	45.7	53.3	<0.1	<MDL	<MDL
1026WA	10/26/87	1650	19.1	75.8	87.1	1.9	21.8	1.70
1026WB	10/26/87	1650	19.1	69.8	80.2	3.2	39.9	3.11
1026WC	10/26/87	1650	19.1	77.6	89.1	2..6	29.2	2.22
1026HA	10/26/87	1718	19.3	65.9	76.4	0.4	5.2	0.41
1026HB	10/26/87	1718	19.3	62.5	72.4	0.4	5.5	0.43
1026BA	10/26/87	0000	24	39.2	56.5	<0.1	<MDL	<MDL
1026BB	10/26/87	0000	24	35.8	51.5	<0.1	<MDL	<MDL
1027TA	10/27/87	1043	22.3	63.8	85.7	4.0	46.7	3.63
1027TB	10/27/87	1043	22.3	64.2	86.3	4.4	51.0	3.97
1027SA	10/27/87	1115	22.2	51.3	68.5	2.4	35.0	2.73
1027SB	10/27/87	1115	22.2	45.7	61.0	2.2	36.1	2.81
1027WA	10/27/87	1207	22.2	75.4	100	5.5	54.6	4.25
1027WB	10/27/87	1207	22.2	79.3	105	4.4	41.5	3.24
1027WC	10/27/87	1207	22.2	79.3	105	5.0	47.2	3.68
1027HA	10/27/87	1242	22.0	68.5	90.7	0.6	6.6	0.52
1027HB	10/27/87	1242	22.0	64.2	85.0	0.4	4.7	0.37
1027BA	10/27/87	0000	24	40.1	57.7	<0.1	<MDL	<MDL
1027BB	10/27/87	0000	24	41.8	60.2	<0.1	<MDL	<MDL
112TA	11/2/87	1502	19.2	63.8	73.7	1.7	23.1	1.80
112TB	11/2/87	1502	19.2	59.9	69.2	2.0	28.9	2.25
112SA	11/2/87	1530	19.3	46.1	53.5	1.1	20.5	1.60
112SB	11/2/87	1530	19.3	43.6	50.5	1.0	19.8	1.54
112WA	11/2/87	1625	19.1	76.3	87.6	--	C	C
112WB	11/2/87	1625	19.1	77.6	89.1	--	C	C
112wc	11/2/87	1625	19.1	77.1	88.6	--	C	C
112HA	11/2/87	1658	19.4	65.1	75.8	0.3	4.0	0.31
112HB	11/2/87	1658	19.4	61.2	71.3	0.2	2.8	0.22
113TA	11/3/87	1028	23.0	65.1	89.9	1.7	18.9	1.47
113TB	11/3/87	1028	23.0	60.8	83.9	2.0	23.8	1.85
113SA	11/3/87	1101	--	--	--	--	A	A
113SB	11/3/87	1101	--	--	--	--	A	A
113WA	11/3/87	1155	22.8	75.8	103	--	C	C
113WB	11/3/87	1155	22.8	76.7	105	--	C	C
113WC	11/3/87	1155	22.8	77.1	105	--	C	C

Table 5 (continued)

Sample ID	Date	Time On	Period (hrs)	Air Flow (lpm)	Total Air (m^3)	DEF (μg)	DEF Conc. (ng/m^3)	DEF Conc. ppt
113HA	11/3/87	1231	22.9	66.8	91.8	--	C	C
113HB	11/3/87	1231	22.9	62.5	85.9	--	C	C
114TA	11/4/87	936	24.6	61.6	91.0	--	C	C
114TB	11/4/87	936	24.6	58.8	86.9	--	C	C
114SA	11/4/87	1235	22.1	41.0	54.6	--	C	C
114SB	11/4/87	1235	22.1	37.1	49.4	--	C	C
114WA	11/4/87	1100	24.7	74.1	110	--	C	C
114WB	11/4/87	1100	24.7	74.1	110	--	C	C
114WC	11/4/87	1100	24.7	74.1	110	--	C	C

A: Equipment Malfunction; B: Sample Lost During Collection; C: Sample Collected But Not Analyzed by Laboratory

Table 6. Replicate DEF Concentrations at Ambient Sites (ppt)

	Tranquility		San Joaquin		Huron		Fresno		West Side (Five Points)		
	1	2	1	2	1	2	1	2	1	2	3
8/31/87	A	0.65	1.75	1.36	1.02	1.14	A	A	1.61	1.63	1.62
9/1/87	0.54	0.65	1.25	1.29	1.39	1.31	A	A	0.84	0.99	1.13
9/2/87	1.01	0.87	A	A	0.59	0.77	<MDL	<MDL	0.72	0.81	0.88
9/3/87	0.39	0.34	0.59	0.44	0.37	0.38	<MDL	<MDL	0.25	0.19	0.19
9/8/87	0.29	0.21	1.18	1.39	0.09	0.10	<MDL	<MDL	1.68	1.81	0.76
9/9/87	<MDL	<MDL	0.13	0.13	1.01	0.90	<MDL	<MDL	0.14	0.14	0.14
9/10/87	<MDL	<MDL	<MDL	<MDL	0.77	0.58	<MDL	<MDL	8.59	9.15	13.7
9/14/87	0.29	0.54	0.34	0.35	4.79	4.80	<MDL	<MDL	19.3	15.9	15.8
9/15/87	0.78	0.76	1.13	1.04	4.10	4.41	<MDL	<MDL	5.00	5.34	6.15
9/16/87	0.78	0.76	1.34	1.59	1.07	1.32	<MDL	<MDL	1.81	1.76	2.73
9/17/87	1.07	0.78	1.61	1.30	1.11	1.16	A	A	1.32	1.45	1.20
9/21/87	4.76	7.05	<MDL	2.16	0.24	<MDL	<MDL	<MDL	8.34	10.9	8.56
9/22/87	5.05	5.82	A	A	1.02	1.31	<MDL	<MDL	8.69	10.1	10.5
9/23/87	4.10	4.72	6.18	5.36	3.34	3.25	A	A	22.6	21.1	18.5
9/24/87	9.40	5.91	6.56	3.86	7.97	Y29	A	A	27.8	29.2	22.3
9/28/87	4.59	3.98	2.08	3.13	2.82	3.87	<MDL	<MDL	A	A	A
9/29/87	10.2	12.1	A	A	1.96	2.32	A	A	16.2	13.1	17.8
9/30/87	12.3	12.2	12.3	14.8	3.21	4.18	A	A	21.2	18.4	24.3
10/1/87	15.0	17.1	A	A	3.60	4.28	0.49	0.35	19.1	24.4	23.0
10/5/87	12.3	14.4	19.1	11.6	0.58	0.49	A	A	5.38	9.23	5.60
10/6/87	9.0	10.6	A	A	2.77	2.11	A	A	11.2	12.0	A
10/7/87	8.69	11.5	5.56	6.41	7.28	7.32	0.37	0.18	10.5	9.1	10.0
10/8/87	11.9	11.8	6.22	5.52	3.22	3.84	0.28	0.28	17.6	16.3	15.3
10/12/87	15.8	15.4	8.20	10.0	4.05	3.83	A	A	22.9	21.2	25.4
10/13/87	10.5	A	6.25	5.08	5.26	5.39	<MDL	<MDL	6.13	6.26	5.82
10/14/87	11.5	10.3	5.33	5.11	0.52	0.55	<MDL	<MDL	3.62	4.32	4.90
10/15/87	6.18	6.40	1.12	1.06	0.25	0.18	<MDL	<MDL	2.92	2.17	2.12
10/19/87	6.39	7.01	6.97	5.50	0.66	0.60	<MDL	<MDL	3.01	4.04	3.42
10/20/87	4.81	4.86	2.73	3.33	1.09	1.62	0.21	0.14	6.13	5.87	5.64
10/21/87	3.82	4.70	1.17	0.70	0.16	0.17	<MDL	<MDL	A	A	A
10/26/87	0.32	0.22	<MDL	<MDL	0.41	0.43	A	A	1.70	3.11	2.22
10/27/87	3.63	3.97	2.73	2.81	0.52	0.37	A	A	4.25	3.24	3.68
11/2/87	1.80	2.25	1.60	1.54	0.31	0.32	A	A	A	A	A
11/3/87	1.47	1.85	A	A	A	A	A	A	A	A	A

A = No Sample

Table 7. Replicate DEF Concentration at Ambient Sites (ng/m³)

	Tranquility		San Joaquin		Huron		Fresno		West Side (Five Points)		
	1	2	1	2	1	2	1	2	1	2	3
8/31/87	A	8.4	22.4	17.5	13.1	14.6	A	A	20.6	20.9	20.8
9/1/87	6.93	8.34	16.0	16.6	17.8	16.8	A	A	10.8	12.7	14.5
9/2/87	13.0	11.1	A	A	7.57	9.88	<MDL	<MDL	9.26	10.4	11.3
9/3/87	5.04	4.30	7.57	5.65	4.62	4.88	<MDL	<MDL	3.23	2.42	2.44
9/8/87	3.72	2.70	15.2	17.8	1.16	1.28	<MDL	<MDL	21.3	23.2	9.77
9/9/87	<MDL	<MDL	1.67	1.67	12.97	11.55	<MDL	<MDL	1.78	1.76	1.80
9/10/87	<MDL	<MDL	<MDL	<MDL	9.88	7.38	<MDL	<MDL	110	117	175
9/14/87	3.72	6.93	4.36	4.49	61.5	61.6	<MDL	<MDL	248	204	203
9/15/87	10.0	9.76	14.5	13.4	52.6	56.6	<MDL	<MDL	64.2	65.5	79.0
9/16/87	10.0	9.76	23.6	20.4	13.7	16.9	<MDL	<MDL	23.3	22.6	35.1
9/17/87	13.7	10.0	20.7	16.7	14.3	14.9	A	A	16.9	18.6	15.3
9/21/87	61.1	90.5	A	27.7	3.08	<MDL	<MDL	<MDL	107	139	109
9/22/87	64.8	74.7	A	A	13.1	16.8	<MDL	<MDL	111	129	135
9/23/87	52.6	60.5	79.3	68.8	42.9	41.7	A	A	290	271	238
9/24/87	120	75.8	84.2	49.5	102	119	A	A	358	375	287
9/28/87	58.9	51.0	26.7	40.2	36.2	49.7	<MDL	<MDL	A	A	A
9/29/87	131	155	A	A	25.2	29.8	A	A	209	168	229
9/30/87	158	157	158	190	41.2	53.7	A	A	272	236	313
10/1/87	193	219	A	A	46.2	54.9	6.29	4.75	245	313	295
10/5/87	157	184	244	149	7.45	6.29	A	A	69.1	118	71.9
10/6/87	116	136	A	A	35.6	27.1	A	A	144	153	A
10/7/87	111	147	71.4	82.3	93.5	94.0	4.75	2.31	136	117	141
10/8/87	152	150	79.7	70.8	41.3	49.3	3.59	3.59	226	209	197
10/12/87	202	198	105	128	52.0	49.2	A	A	294	272	326
10/13/87	135	A	80.2	65.2	67.5	69.2	<MDL	<MDL	78.7	80.4	74.7
10/14/87	147	133	68.4	65.6	6.68	7.06	<MDL	<MDL	46.5	55.5	62.9
10/15/87	79	82.1	14.4	13.6	3.21	2.31	<MDL	<MDL	37.5	27.8	27.3
10/19/87	82.0	89.9	89.5	70.6	8.47	7.70	<MDL	<MDL	38.7	51.9	43.9
10/20/87	61.7	62.3	35.0	42.8	14.0	20.8	2.70	1.80	78.7	75.3	72.4
10/21/87	49.0	60.3	15.0	8.99	2.05	2.18	<MDL	<MDL	A	A	A
10/26/87	4.11	2.82	<MDL	<MDL	5.26	5.52	A	A	21.8	39.9	29.2
10/27/87	46.6	50.9	35.0	36.1	6.68	4.75	A	A	54.6	41.5	47.2
11/2/87	23.1	28.8	20.5	19.8	3.98	4.11	A	A	A	A	A
11/3/87	18.8	23.7	A	A	A	A	A	A	A	A	A

A: No Sample

Table 8. Average DEF Concentration at Ambient Sites (ppt)

Date	Tranquility	San Joaquin	Huron	Fresno	West Side (Five Points)	Bakersfield
8/31/87	0.65	1.6	1.1	A	1.62	A
9/1/87	0.60	1.3	1.4	A	0.99	A
9/2/87	0.94	A	0.68	A	0.80	A
9/3/87	0.37	0.52	0.37	A	0.21	A
9/8/87	0.25	1.3	0.10	A	1.3	A
9/9/87	A	0.13	0.96	A	0.14	A
9/10/87	A	A	0.68	A	1.0	A
9/14/87	0.42	0.35	4.8	A	1.7	A
9/15/87	0.77	1.1	4.3	A	5.5	A
9/16/87	0.77	1.5	1.2	A	2.1	A
9/17/87	0.93	1.5	1.1	A	1.3	A
9/21/87	5.9	2.1	0.24	A	9.3	A
9/22/87	5.4	A	1.2	A	9.8	A
9/23/87	4.4	5.8	3.3	A	2.1	0.27
9/24/87	7.7	5.2	8.6	A	26	A
9/28/87	4.3	2.6	3.4	A	A	A
9/29/87	1.1	A	2.1	A	1.6	0.92
9/30/87	1.2	1.4	3.7	A	2.1	A
10/1/87	1.6	A	3.9	0.43	2.2	A
10/5/87	1.3	1.5	0.54	A	6.7	A
10/6/87	1.0	A	2.4	A	1.2	A
10/7/87	9.6	6.0	7.3	0.28	9.9	A
10/8/87	1.2	5.9	3.5	0.28	1.6	A
10/12/87	1.6	9.1	3.9	A	2.3	A
10/13/87	1.1	5.7	5.3	A	6.1	A
10/14/87	1.1	5.2	0.54	A	4.3	A
10/15/87	6.3	1.1	0.22	A	2.4	A
10/19/87	6.7	6.2	0.63	A	3.5	A
10/20/87	4.8	3.0	1.4	0.18	5.9	A
10/21/87	4.3	0.93	0.17	A	A	A
10/26/87	0.27	A	0.42	A	2.3	A
10/27/87	3.8	2.8	0.45	A	3.7	A
11/2/87	2.0	1.6	0.32	A	A	A
11/3/87	1.7	A	A	A	A	A
Mean Concentration	5.8	3.9	2.1	0.3	8.7	0.6

A No Sample or <MDL

Table 9. Average DEF Concentration at Ambient Sites (ng/m³)

Date	Tranquility	San Joaquin	Huron	Fresno	West Side (Five Points)	Bakersfield
8/31/87	8.4	20	14	A	21	A
9/1/87	7.6	16	17	A	13	A
9/2/87	12	A	8.7	A	10	A
9/3/87	4.7	6.6	4.7	A	2.7	A
9/8/87	3.2	16	1.2	A	16	A
9/9/87	A	1.7	12	A	1.8	A
9/10/87	A	A	8.7	A	130	A
9/14/87	5.3	4.4	61	A	220	A
9/15/87	9.9	14	55	A	70	A
9/16/87	9.9	22	15	A	27	A
9/17/87	12	19	15	A	17	A
9/21/87	76	28	3.1	A	120	A
9/22/87	70	A	15	A	130	A
9/23/87	57	74	42	A	270	3.5
9/24/87	98	67	110	A	340	A
9/28/87	55	33	43	A	A	A
9/29/87	140	A	27	A	200	12
9/30/87	160	170	47	A	270	A
10/1/87	210	A	51	5.5	280	A
10/5/87	170	200	6.8	A	86	A
10/6/87	126	A	31	A	150	A
10/7/87	120	77	94	3.6	130	A
10/8/87	151	75	45	3.6	210	A
10/12/87	200	120	51	A	300	A
10/13/87	130	73	68	A	78	A
10/14/87	140	67	6.9	A	55	A
10/15/87	81	14	2.8	A	31	A
10/19/87	86	80	8.1	A	45	A
10/20/87	62	39	17	2.3	75	A
10/21/87	55	12	21	A	A	A
10/26/87	3.5	A	5.4	A	30	A
10/27/87	49	36	5.7	A	48	A
11/2/87	26	20	4.0	A	A	A
11/3/87	21	A	A	A	A	A

A: No Sample or < MDL

Sampling Precision

Table 10 contains the calculated data precision of the collocated samplers at the ambient sites. The precision was calculated from the following equation:

$$P = [Y - (Y + X)/2]/X \times 100$$

where P is the calculated data precision; Y is the concentration from duplicate sampler of collocated pair; X is the concentration from primary sampler of collocated pair. Precision for the ambient data set ranged from -26 to 43 percent. Another measure of sample variability is the replicate analysis data of spiked samples, included in the ARB analysis report in Attachment IV.

Data completeness for the entire data set was greater than 90 % for the ambient samples, based on the number of valid samples analyzed divided by the total number of samples taken.

Table 10. Precision for Ambient Site Samples (percent) for Replicated Sampling

Date	Tranquility	San Joaquin	Huron	Fresno	West Side (Five Points)	Bakersfield
8/3 1/87	A	-11	5.9	A	0.62	A
9/1/87	10	1.6	-2.9	A	8.9	A
9/2/87	-6.9	A	15	A	6.2	A
9/3/87	-7.1	-12	1.4	A	-12	A
9/8/87	-14	8.9	5.6	A	3.9	A
9/9/87	A	0.0	-5.5	A	0.0	A
9/10/87	A	A	-12	A	3.3	A
9/14/87	43	1.5	0.10	A	-8.8	A
9/15/87	-1.3	-4.0	3.8	A	3.4	A
9/16/87	-1.3	9.3	11	A	-1.4	A
9/17/87	-14	-9.6	2.3	A	4.9	A
9/21/87	24	A	A	A	15	A
9/22/87	7.6	A	14	A	8.1	A
9/23/87	7.6	-6.6	-1.4	A	-3.1	150
9/24/87	-19	-21	8.3	A	2.3	A
9/28/87	-6.6	25	19	A	A	A
9/29/87	9.4	A	9.2	A	-9.6	23
9/30/87	0.0	10	15	A	-6.6	A
10/1/87	6.9	A	9.4	-12	14	A
10/5/87	8.5	-20	-7.8	A	36	A
10/6/87	7.4	A	-12	A	3.1	A
10/7/87	11	7.6	0.27	-26	-7.1	A
10/8/87	-0.4	-5.6	9.6	0.0	-3.7	A
10/12/87	-0.95	11	-2.7	A	-3.7	A
10/13/87	A	-9.4	1.2	A	1.1	A
10/14/87	-4.9	-2.1	2.9	A	9.7	A
10/15/87	1.8	-2.7	-14	A	-13	A
10/19/87	4.8	-11	-4.6	A	17	A
10/20/87	0.52	11	24	-17	-2.1	A
10/21/87	12	-20	3.1	A	A	A
10/26/87	-16	A	2.4	A	41	A
10/27/87	4.7	1.5	-14	A	-12	A
11/2/87	13	-1.8	1.6	A	A	A
11/3/87'	13	A	A	A	A	A

A: No Sample, < MDL or Only One Replicate

Literature Cited

(1) Pesticide Use Report. California Department of Food and Agriculture, Sacramento, California. 1986 Annual Report.

(2) Hermann, B. W. "Atmospheric Residues of Defoliants DEF, Folex and their Sulfur Containing Byproducts near Treated Cotton fields", Ph.D. Thesis, University of California, Davis, CA, 1980

(3) Oshima, R. J.; Mischke, T. M.; Gallavan, R. E. "Drift Studies from the Aerial Application of DEF and Folex in Fresno and Merced Counties, California. 1979"; Report to the California Department of Food and Agriculture, Sacramento, CA, March 1980.

(4) Wilson, B. W., C. M. Cisson, W. R. Randall, J. E. Woodrow, J. N. Seiber and J. B. Knaack: Organophosphate Risk Assessment; Field Testing of DEF with the Scaleless Chicken. Bull. Environm. Contamination toxicology 24, 921 (1980)

(5) Kilgore, W. W.; C. Fisher; J. Rivers; N Akensson; J. Wicks; W. Winters; W. Winterlin. Human Exposure to DEF/merphos. Residue Reviews 91, 71 (1984)

Acknowledgments

We wish to acknowledge the technical assistance of Lynn Baker, Tom Parker and Mike Poore with the California Air Resources Board, and Christine Frohlich, Soghra Begum and Jenifer Wong with the Department of Environmental Toxicology for their technical assistance. The CARB group supplied all of the analytical results for DEF contained in this report. This study was supported by contract funds from the California Air Resources Board. Mention of proprietary products is made for identification purposes only and does not imply endorsement by ARB.

Attachment IV

Analysis Method

State of California
Air Resources Board
Monitoring & Laboratory Division

METHOD NLS019

STANDARD OPERATING PROCEDURE FOR THE DETERMINATION OF DEF IN AMBIENT AIR

1. SCOPE

This document describes a method for the analysis of DEF (S,S,S-Tributylphosphorotrithioate) at concentrations normally found in ambient air. The method was developed from California Department of Food and Agriculture and U.C. Davis methods.

2. SUMMARY OF METHOD

After sampling, the exposed XAD-4 sorbant is extracted in dublicate wlth 50 ml portions of ethyl acetate. The resultant extract is concentrated to a volume of 5.0 ml and two microliters Injected Into a gas chromatographic system equipped wlth a 12 meter DB-1 fused silica capillary column, N-P thermionic detector (TSD), and data system. The resultant peak is identified by characteristic retention time and quantitated in reference to external standards. The Identity of the compound can be confirmed by use of a column of different characteristics, a detector of different selectivity, or by GC/MS.

3. INTERFERENCES/LIMITATIONS

3.1 Sampling, to be performed by U.C. Davis personnel, Is outside the scope of this document. Breakthrough and capture efficiency studies have not been performed for the preparation of this SOP.

3.2 Compounds responding to the TSD detector and having similar GC retention times may Interfere, causing misidentification or erroneous quantltation.

3.3 All samples recleved by the laboratory are placed Immediately in a freezer operating at -4 degrees Centigrade or lower. Samples are not stored more than two weeks before analysls, thus preventing degradatlon.

4. APPARATUS

4.1 Varian Model 3400 Gas Chromatographic system equipped with a thermionic detector (TSD), split/splitless capillary injector, and Model 402 data system.

4.2 DB-1 fused silica capillary column, 12 meters x 0.25 mm id, 0.5 um film thickness.

4.3 Erlenmeyer flasks, 250 ml, with ground glass stoppers,

4.4 Sample agitating table with holders for 250 ml flasks.

4.5 Explosion-proof hot plate with continuously adjustable heating controls.

5. REAGENTS AND CHEMICALS

5.1 Ethyl Acetate, Pesticide Grade. CAUTION, THIS SOLVENT IS VERY VOLATILE AND VERY FLAMMABLE. DO NOT EXPOSE TO OPEN FLAME OR HEAT SOURCES.

5.2 Stock Standard: Commercially available certified solution of 1000 ug/ml DEF in methanol (Nanogens, Inc).

5.3 Callbration Standards: Dilute 100 ul, 40 ul, and 10 ul of the Stock Standard Into 100 ml of ethyl acetate. This corresponds to 1.0, 0.40, and 0.10 ug/ml, respectively.

5.4 Control Standard: Dilute 200 ul of the Stock Standard into 10.0 ml ethyl acetate. This corresponds to 20 ug/ml, or 50 ul = 1.0 ug.

6. INSTRUMENT CONDITIONS

Column: 12 m x 0.25 mm id DB-1 fused silica capillary

Temperatures: Injector: 250°C
Detector: 300°C
Oven: 50°C, initial, hold for 1 min; ramp at 50°C/min to 150°C; ramp @ 8°C/min to 220°C hold for 4 minute

Flow Rates: Carrier: Helium, 30 cc/min at splitter, 0.8 minutes splitless hold, 25 cm/sec carrier velocity

Detector: TSD-Range 11, Attenuation x1

7. INSTRUMENT CALIBRATION PROCEDURE

7.1 Before proceding with the Instrument calibration, a solvent blank must be analyzed. Inject 2.0 ul of blank solvent. If the analysis indicates interferences or contamlnatlon, the solvent must be replaced and the problem solved.

7.2 A method blank must be analyzed for every 12 samples analyzed. Select 30 cc of unused XAD-4 and carry the sorbant through the entire extractlon and analysis process. If Interferences are noted, the source must be found and eliminated.

7.3 Instrument calibration is performed by the injection of 2.0 ul of the 1.0 ug/ml standard. The resultant chromatogram is used to calibrate the retention time and response factor of DEF under the conditions of the analysis. Additional standards (0.4 and 0.1 ug/ml) are then analyzed to demonstrate method linearity and precision. This calibration procedure must be performed for. every 12 samples analyzed.

7.4 To insure that the procedure is in statistical control, a matrix spike (control sample) must be analyzed with each batch of samples. 30 cc of XAD-4 is spiked with 50 ul of the control standard and carried through the entire procedure. The results of this analysis must fall within the upper and lower warning limits of the method. If the results fall outside those limits, the analysis must be performed again. If the results continue to fall outside the proscribed limits, the method must be discontinued and the problem solved.

8. ANALYSIS OF SAMPLES

8.1 Remove the exposed XAD-4 resin from the sample container, place the resin in a 250 ml stoppered Erlenmeyer flask, rinse the sample container wlth 50 ml ethyl acetate, and add to the flask. Place the flask on a shaker table and agitate for 45 minutes. After extraction, let the resln settle and filter the supernatant through glass wool Into a clean concentrator flask. Add an additlonal 50 ml ethyl acetate to the resin, re-extract, and add entire contents to the filter funnel. After the extract has drained Into the concentrator, rinse the extraction flask with 20 mi of solvent and add to the filtered resln. Let drain completely.

8.2 Add a teflon boiling chip to the concentrator flask and evaporate the solvent to approximately 1 mi. CAUTION: ETHYL ACETATE IS VERY FLAMMABLE, USE A FUME HOOD AND EXTREME CARE. With careful rlnslng, dilute the extract to 5.0 ml with solvent. Place the extract in properly labelled amber screw-capped vial and store for analysis.

8.3 Inject 2.0 ul *of* each extract into the chromatographic system for analysis. Record all pertinent information in the instrument. analysis book and on the resultant chromatograms.

8.4 The results are recorded in micrograms per sample and are calculated as follows:

Micrograms = ug/ml(found) X 5 ml(sample volume)

9. METHOD SENSITIVITY, PRECISION, AND ACCURACY

The method sensitivity, precision, and accuracy are shown in Table 1. The data were generated using standards. Note that the MDL Is presented in ug/ml and in ug/sample assuming a final extract volume of 5.0 ml.

10. DESORPTION EFFICIENCY AND SAMPLE STABILITY

The sorbant being used by U.C. Davis personnel for sampling was spiked with 2.0 and 1.0 micrograms of DEF and analyzed according to the above procedure. The average recovery was found to be 92% with a variation of 8.5 %. Two portions of sorbant was spiked with 1.0 ug DEF and stored at -4 degrees C for 2 weeks. The sorbant was then analyzed with an average recovery of 96 %.

TABLE 1

DEF ANALYSIS PRECISION AND ACCURACY

CONCENTRATION, ug/ml	AREA COUNT X 10^4	REL STND DEV, %
2.00	14.36	4.1 (n=5)
1.00	7.46	6.3 (n=4)
0.40	2.63	5.2 (n=5)
0.08	0.454	5.0 (n=5)
0.04	0.199	6.7 (n=5)

LINEAR REGRESSION ANALYSIS DATA

Correlation Coefficient: 0.9996

Intercept: -0.11×10^4 counts (0.015 ug/ml)

Slope: 7.29×10^4 counts/ ug/ml DEF

Detection Limit: Intercept + 3(RSDXIntercept)
= 0.02ug/ml or 0.1ug/sample