Improved Urban Modeling Approach to Evaluate Pesticide Product for Impacts to Surface Waters in California

Yuzhou Luo, Nan Singhasemanon, Kean S. Goh

California Department of Pesticide Regulation
Sacramento, CA 95812

10/28/2014

SWPP modeling for pesticide registration evaluation

- CDPR's Surface Water Protection Program (SWPP) is developing a consistent, transparent, and fast method for evaluating new AI registration packages
- Initially designed for agricultural uses by generally following USEPA approaches for registration evaluation
- Improvements under development, including urban pesticide uses, degradates, California receiving water…

Urban vs. Ag. (10-ha examples)

Residential (10ha)

Commercial/industrial (10ha)

Agricultural (10ha)

10 ha: USEPA recommended size of drainage area for modeling purpose in registration evaluation and risk assessment

Registration evaluation for urban pesticide uses

- No data: half-life, adsorption coefficients, etc., on *impervious surface* are not available
- No model is consistently used by USEPA for registration evaluation of urban pesticides
- For post-use risk assessment, USEPA developed a modeling scenario for *impervious surface*

USEPA approach

- The model ("PRZM/EXAMS") with the modeling scenario ("San Francisco impervious surface") is "*the most suitable available modeling approach for impervious runoff*" (USEPA EFED, 2013)

USEPA approach

- The model ("PRZM/EXAMS") with the modeling scenario ("San Francisco impervious surface")
- Known limitations on landscape description and simulation design, e.g.,
  - Nationwide suburban data: ¼ acre house lot
  - Buildings all surrounded by lawns
  - Optimized lawn irrigation by soil moisture
  - No dry-weather runoff (urban drool) from paved areas
  - Assumed equal contributions of runoff from pervious and impervious surfaces

Objectives

- Based on California conditions, to improve urban landscape description represented in the modeling approach
- To improve the simulation design for better prediction of EEC (estimated environmental concentration) from an urban catchment

USEPA standard residential lot and urban watershed

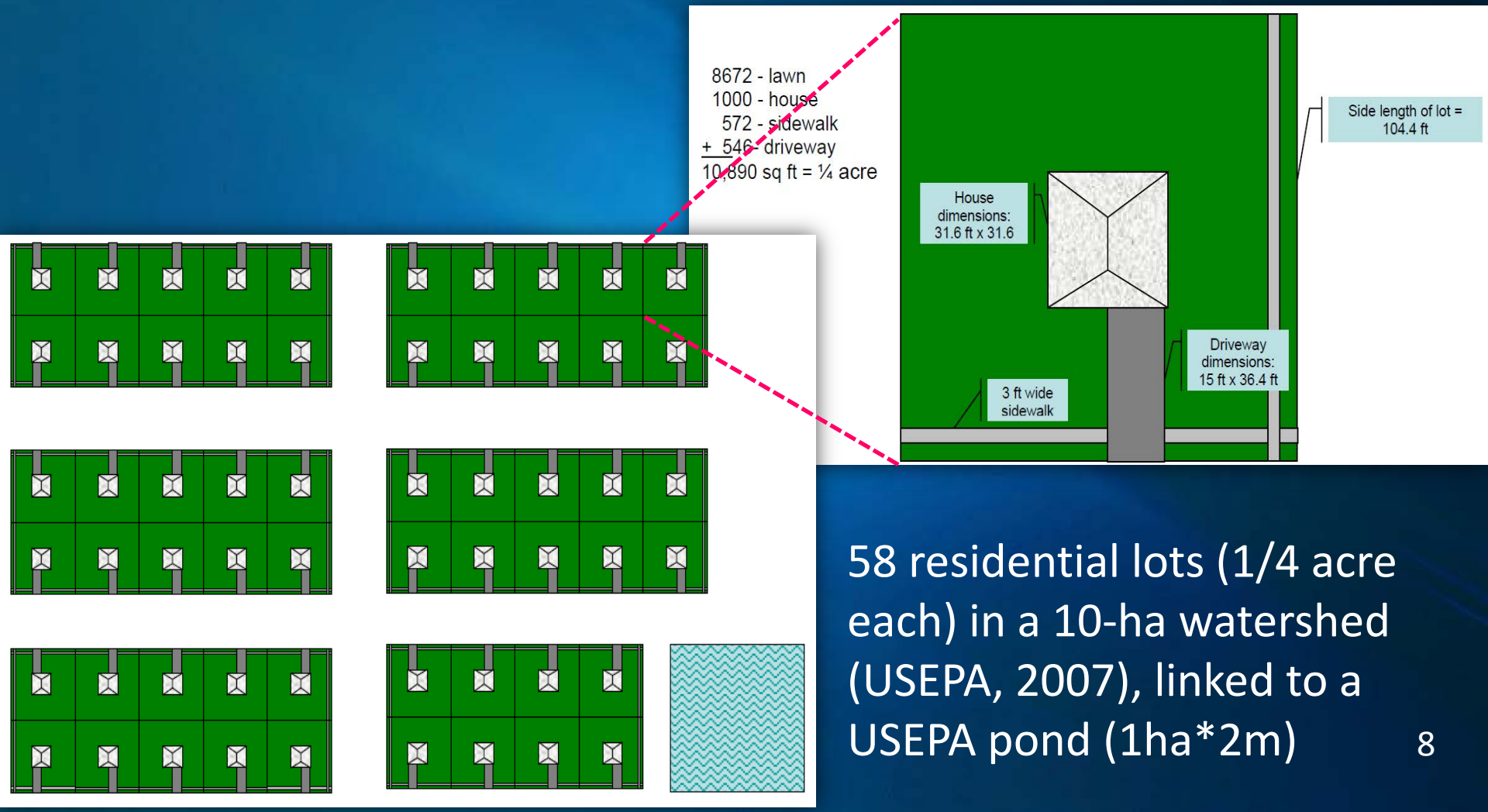

58 residential lots (1/4 acre each) in a 10-ha watershed (USEPA, 2007), linked to a USEPA pond (1ha*2m)

SWPP landscape description for California urban areas

- Impervious surface coverage (ISC): USGS landuse images, and Caltrans urban boundaries (for San Francisco-Oakland)
- Residential density: OEHHA urban survey (Sacramento, Irvine, and Santa Cruz)
- House footprint: American Housing Survey 2011 (for San Francisco)
- 3-ft walkway around a building
- 3-ft paved area adjacent to lawns subject to unintended irrigation
- Pre-scheduled irrigation: UCANR lawn watering guide

Landscape description: summary

	USEPA	SWPP
Overall impervious fraction	50%	83%
#lots per 10 ha watershed	58	201.6
Lot size	1/4 acre	1/12 acre
House footprint	1000 ft^2 (house) + 900 ft^2 (garage)	1500 ft^2
Driveway	546 ft^2	546 ft^2
Sidewalk	268 ft^2	135 ft^2
Lawns	9075 ft^2	653 ft^2
Paved walkway round a house	0	501 ft^2

The above data are for residential watershed. Commercial/ industrial and urban right-of-way scenarios are also developed.

Simulation design, USEPA

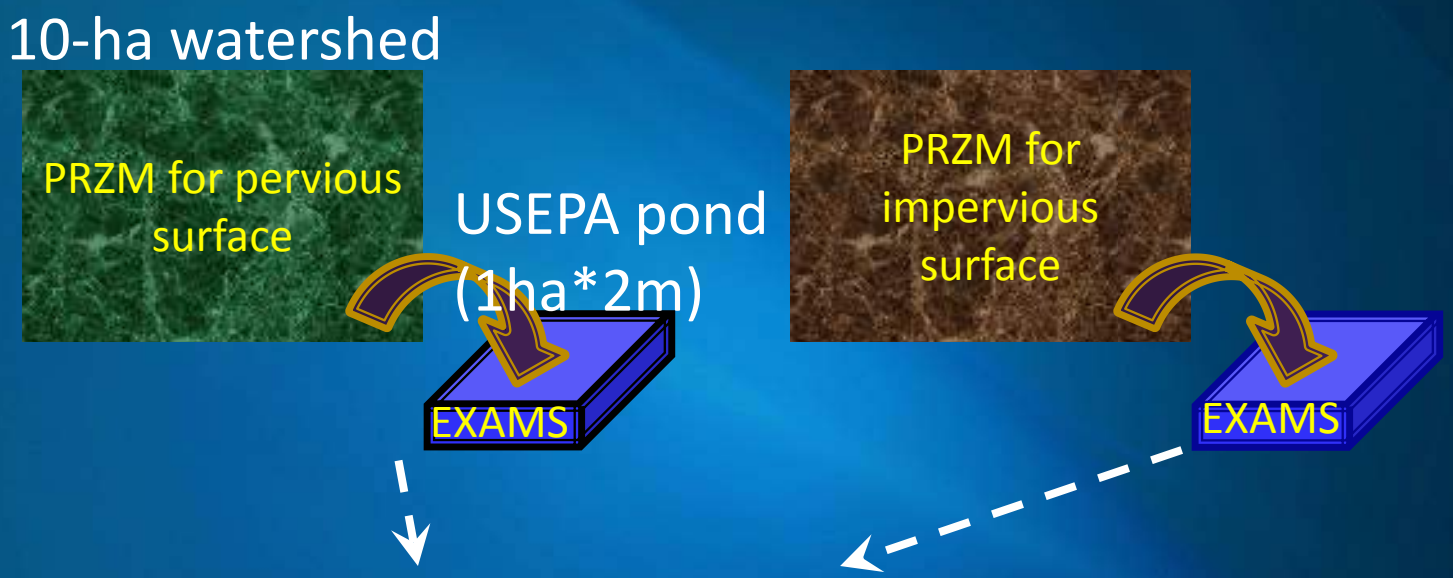

$$EEC=f_P*EEC_P+f_{IMP}*EEC_{IMP}$$

For residential, simplified as $EEC=(EEC_P+EEC_{IMP})/2$

EEC = estimated environmental concentration; f = fractional area, "P" for pervious surface; "IMP" for impervious surface

4 urban surfaces modeled by SWPP

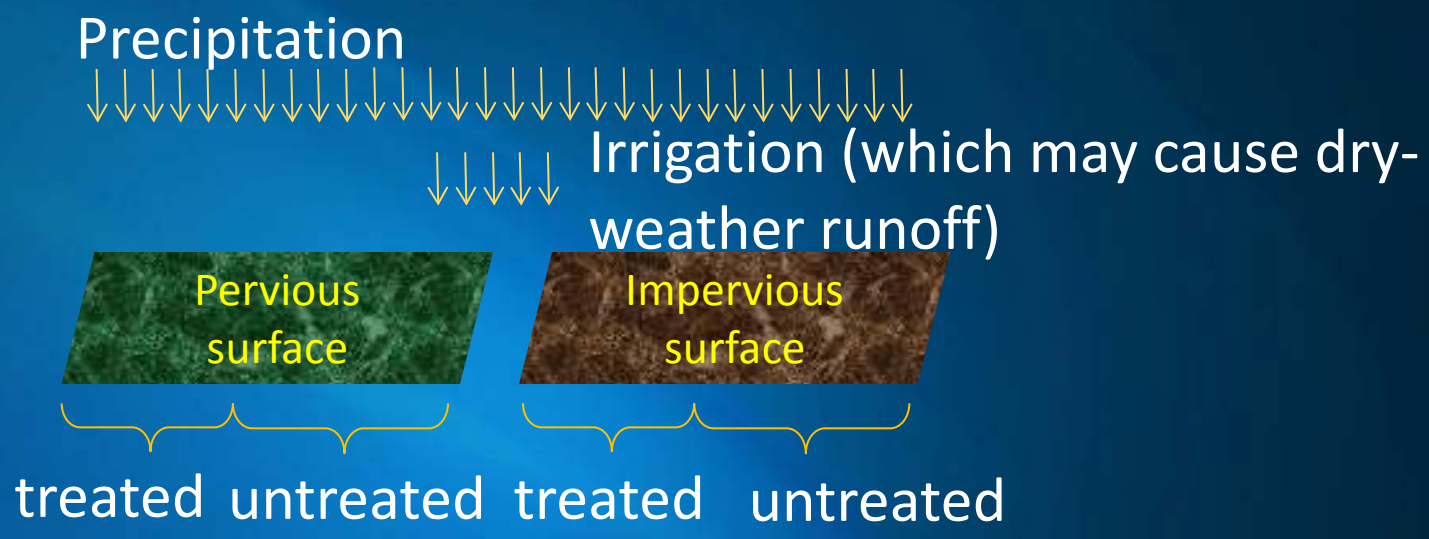

Water	Precipitation only				Precipitation + irrigation			
Permeability	Pervious (*f1*)		Impervious (*f2*)		P (*f3*)		IMP (*f4*)	
Treatment	Treated (*ft1*)	Un-treated	*ft2*		*ft3*		*ft4*	

Simulation design, SWPP

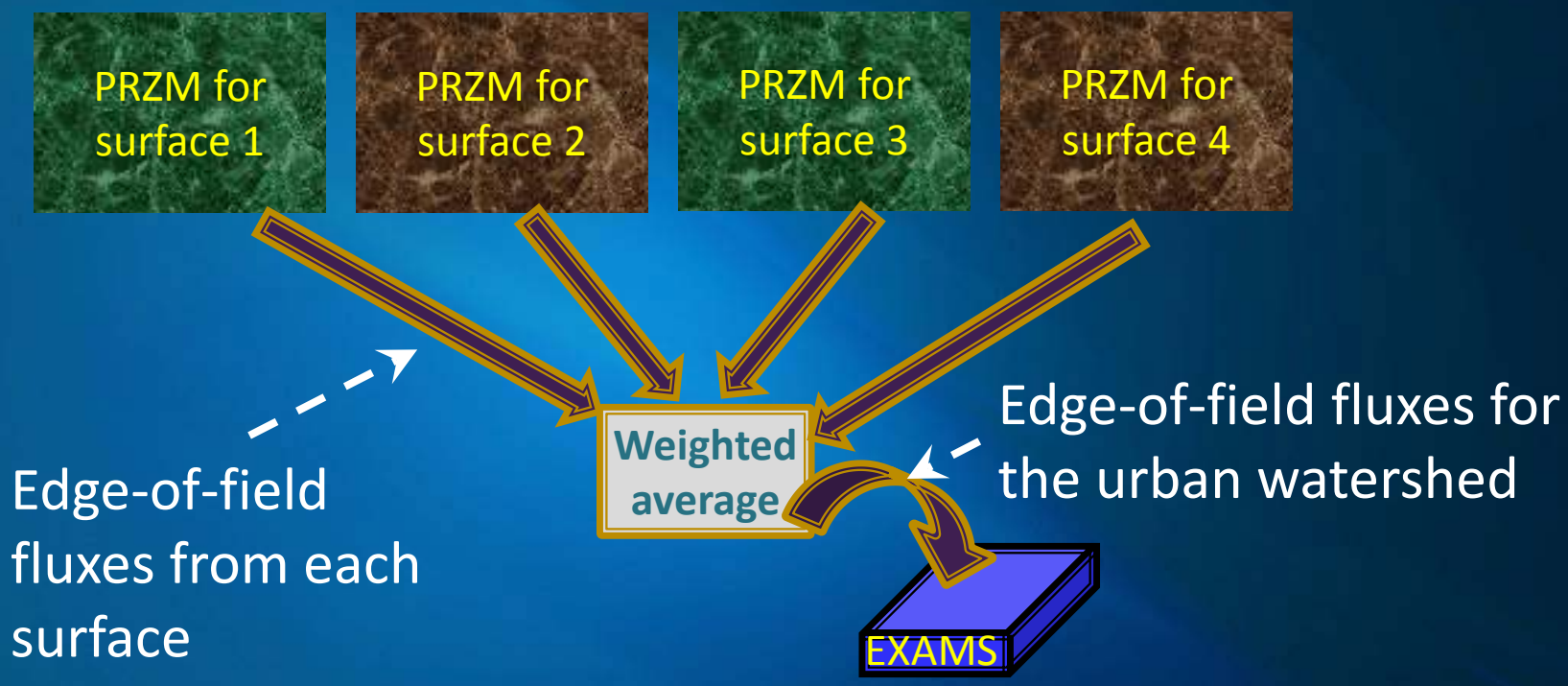

Urban module: summary

Modeling components	USEPA	SWPP
Model	PE5 (integrated PRZM-EXAMS)	PRZM and EXAMS, separate simulations
Modeling scenario	2 surfaces, USEPA tier-2 modeling scenarios for California	4 surfaces, modeling scenarios revised from USEPA
Landscape description	Residential; Commercial/industrial; Rights-of-way	Modified for residential and commercial/industrial; Rights-of-way (USEPA)
Simulation design	Run PRZM-EXAMS for each surface; report the averages of the two EXAMS results	Run PRZM for each surface; aggregated resulting fluxes before EXAMS simulation

Computer implementation

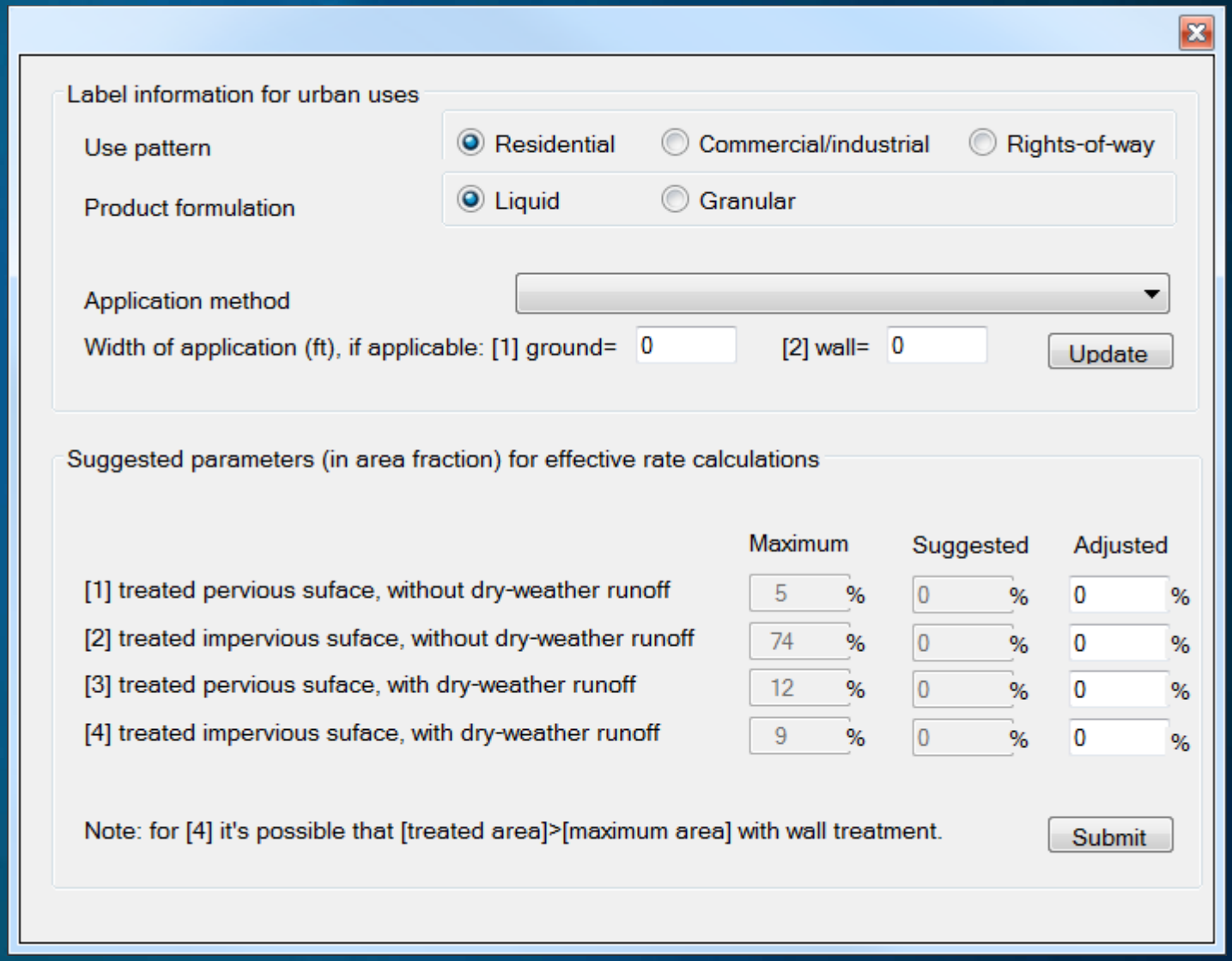

Additional considerations

- Upgraded to PRZM5/VVWM
- Compared with landscape descriptions ("Aliso Viejo" scenario) in the SWMM modeling (Winchell et al., 2014, PWG-ERA-11)
- To refine application extent with urban insecticide survey results (Winchell, 2013, PWG-ERA-02b), e.g.,
  - Fraction of households using outdoor insecticides
  - Possibility of a pesticide AI used in each application
  - Percentage of surface area of a use site

References

- SWPP Product Registration Review Process (http://www.cdpr.ca.gov/docs/emon/surfwtr/review.htm)
  - Part I "initial screening" (Luo and Deng, 2012a)
  - Part II "refined modeling" (Luo and Deng, 2012b)
  - Part III "urban module" (Luo, 2014)
  - User Manual (Version 3.1) (Luo and Singhasemanon, 2014)

- Risk assessment for urban pesticide uses in "USEPA Effects Determinations for the California Red-legged Frog" (www.epa.gov/espp/litstatus/effects/redleg-frog)

Questions?

Yuzhou Luo, Ph.D.
Research Scientist III
CDPR/EM/SWPP
yuzhou.luo@cdpr.ca.gov
(916) 445-2090